Orbit Flat Stool



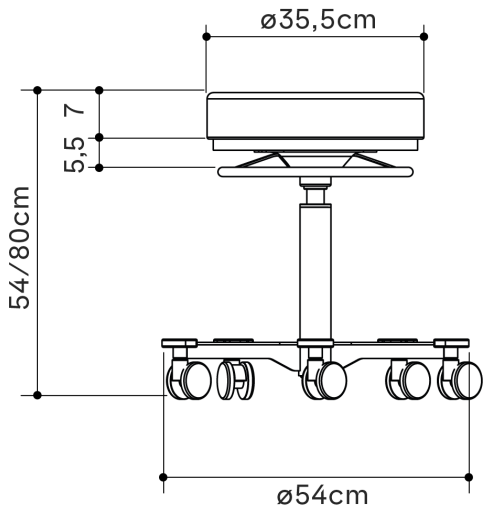

- NG.STOOL.FLAT.A43
- NG.STOOL.FLAT.A54
- NG.STOOL.FLAT.A85
- NG.STOOL.FLAT.A66
- NG.STOOL.FLAT.A26
- NG.STOOL.FLAT.A71
- NG.STOOL.FLAT.A33

General Specifications

DESCRIPTION
Move around what matters.
Your work is never static.It moves. It flows. It adapts with every patient.
ORBIT is designed to follow that rhythm.
Smooth rotation. Precise movement.
Absolute stability. Pure geometry with a natural wood detail that brings warmth into the clinical space.
Minimal. Functional. Essential.
Everything revolves around your patient.
ORBIT is your center.

UPHOLSTERY
Naggura skin PU

OPERATION
360° ring lever

WHEELS
ø6 cm
Block when no one sits.

PACKAGING SIZE
49,5 X 48,5 X 25,5 cm

N.W.KG
10

G.W.KG
12

MIN/MAX HEIGHT
54/80 cm